CHAPTER 9

Motivational underpinnings of utility in decision making

Decision field theory analysis of deprivation and satiation

Jerome R. Busemeyer, James T. Townsend, and Julie C. Stout
Indiana University

The concept of *utility* is central to theories of decision-making. Yet little is known about the source of the personal worth that an outcome produces. Consider a typical problem such as choosing a movie for weekend entertainment (see Table 1). According to utility theories (cf. Keeney & Raiffa 1976; Von Winterfeldt & Edwards 1982), each option (e.g., drama, comedy, or action movie) is characterized by a set of attributes (e.g., romance, humor, excitement, fearfulness). The individual assesses her subjective value or *utility* for each attribute on each option (e.g., she likes the tender romance of a drama, and she loathes the thrilling violence of an action movie). Finally, the overall evaluation of each option is based on a weighted combination of its utilities, and the option producing the greatest evaluation is chosen. The utilities that enter into these evaluations are treated as primitives – they are initially unknown and they must be estimated from a decision maker's personal judgments. For example, utility theories cannot explain why a decision maker values the romance of a drama more than the excitement of an action movie. In sum, utility theories only explain how utilities are used to make choices; the utilities themselves are left unexplained.

The purpose of this chapter is to build a theory of decision-making that attempts to identify some of the basic sources of utility. In particular, we present a theory that formally describes how needs change over time as a function of external stimulation, and internal deprivation and consummation. The remainder of the chapter is organized as follows. First we review recent research

Table 1. Multi-attribute table for movie choice problem.

	Attributes			
Options	Romance	Humor	Excitement	Fearfulness
Drama	very high	moderate	low	low
Comedy	moderate	high	moderate	low
Action	very low	moderate	very high	high

that demonstrates the influence of need states on decision-making. Second we present a brief review of previous theoretical work on motivational mechanisms. Third, we propose a new extension of a dynamic model of decision making, called decision field theory, which incorporates a dynamic model of needs. Fourth, we apply this extension of decision field theory to research examining the influence of affect and emotion on decision-making. Finally, we present a preliminary sketch of how the psychological components of decision field theory map onto to neuro-physiological mechanisms in the brain.

Previous research on affect and decision making

Note that utility theories treat the subjective values that enter the decision rule as fixed and invariant parameters, like Platonic entities laying quietly in the mind. When asked to make a decision, it is implicitly assumed that the decision maker retrieves these entries from some fixed table of values stored permanently in memory. The process is viewed in virtually the same manner as reading off the numbers from a table printed in a consumer magazine.

Recent research has led decision theorists to change this view dramatically. It is now generally believed that utilities are constructed, at the moment and on the spot, in a manner that serves the purpose of the immediate decision context (Slovic 1995). For example, prospect theory (Kahneman & Tversky 1979) postulates that values are determined by comparing an outcome to some contextually dependent reference point. Contingent weighting theory (Tversky, Sattath, & Slovic 1988) assumes that the weight given to a dimension varies depending on the specific type of preference task. Change of process theory (Mellers, Ordóñez, & Birnbaum 1992) allows the rule for combining values to change across response measures. Adaptive decision making models (Payne, Bettman, & Johnson 1993) hypothesize that decision makers select different strategies depending on the number of attributes, options, and time pressure.

Although constructive theories allow utilities to change depending on context, if the context is held fixed, then the same construction process operates, and so the utilities remain constant across time. In this sense, constructive theories provide a *static*, as opposed to a *dynamic*, view of values. For example, it is generally thought that an elimination by aspects type of choice strategy is elicited in the context of making choices from a large set of options (Payne, Bettman, & Johnson 1993). But if the choice set is fixed, then the values of the aspects, upon which the elimination process is based, are treated as fixed parameters (cf. Tversky 1972).

According to a dynamic view, consequences are valuable only to the extent that they satisfy some demands or needs of an individual (see also Markman & Brendt 2000). Furthermore, these demands or needs change systematically over time as a function of external environmental stimulation, or internal deprivation and consummation cycles. For example, a spectacular advertisement may be used to arouse or stimulate a consumer's interest in an action movie. However, if the consumer just recently watched a series of action movies over the past few weeks, she may feel tired or satiated with that type of entertainment, and she may now feel a need for a humorous or romantic movie. After many weeks of foregoing action movies, the need for the excitement of an action movie may gradually rise to dominate once again. In this way, the individual's personal values change dynamically over time as a function of external environmental stimuli and internal deprivation-satiation mechanisms.

Empirical and experimental support for the moderating effects of need stimulation and need deprivation on decision-making has recently begun to accumulate (see Loewenstein & Lerner 2000). One notable example is a study by Goldberg, Lerner, and Tetlock (1999). Participants first viewed a stimulating anger inducing film of a violent crime, followed by a trial for the crime. For half of the viewers, the film ended with a conviction and punishment of the perpetrator; and for the other half, the film ended with the perpetrator getting off free due to a legal technicality. Subsequently, all of the participants viewed negligence cases that were completely unrelated to the earlier film, and made judgments of punishments for these cases. The justice deprived participants delivered stronger punishments in the unrelated negligence cases as compared to the participants for whom justice was satisfied. Thus the need for justice aroused by stimulation in one case spilled over into decisions on unrelated cases. Berkowitz (1993) provides many other empirical example of this type of process.

Another relevant example is study by Read and van Leeuwen (1998). Participants were asked to choose between two snacks, a healthy snack (e.g., fruits)

versus an unhealthy snack (e.g., candy bars). Presumably, the former is more desirable for health reasons, and the latter satisfies hunger motivation better. Hunger deprivation was manipulated by asking participants to make this choice before lunch (high deprivation) or after lunch (low deprivation). The incentive value of the snacks was also manipulated by either delaying the snack delivery by a week, versus delivering the snack immediately after the choice. The results demonstrated a strong interaction between cognitive and motivational systems. Under the immediate choice condition, motivation always dominated, and most participants chose the unhealthy snack. When incentive was reduced by delay, healthy reasons prevailed over hunger for low deprivation participants who now preferred the health snack; however hunger still dominated the decision for high deprivation participants who continued to choose the unhealthy snack.

Shiv and Fedorikhin (1999) also found a strong interaction between cognition and motivation. Similar to the previous study, they examined choices between healthy (e.g., fruit) snacks versus unhealthy (fudge cake) snacks. They manipulated hunger stimulation by presenting the real snacks on a tray for direct inspection, versus presenting only photos of the snacks. The salience of the health rationale was also manipulated by putting half of the participants under a high memory load condition (reducing capacity to think of health reasons) and the other half was under a low memory load condition. In this case, when the health rationale was not suppressed, most participants preferred the healthy snack. However, when the high memory load suppressed reasoning, then the hunger manipulation dramatically reversed preferences: participants under high hunger stimulation preferred the unhealthy snack, whereas participants under low hunger stimulation preferred the healthy snack.

It is possible, of course, to treat needs and demands in a snapshot manner. In other words, constructive theories could include the current need state as part of the context for the computation, thus avoiding the problem of explaining the dynamics changes in need states over time. For example, some researchers have argued that strategy choice may depend on emotional states and moods (Lewinson & Mano 1993; Luce, Bettman, & Payne 1997). However, this approach fails to provide a theory that predicts how needs change over time depending on the history of past stimuli and choices. Furthermore, this snap shot approach requires specifying a construction process conditioned on each and every need state, which is far from a parsimonious solution. The present chapter takes a diametrically different approach to describing needs and their dynamic effects on decisions.

Earlier motivation theories

Identifying the source of reinforcement value was a central issue for the neo – behaviorist theories of Hull, Mower, Spence, and Tolman (see Cofer & Appley 1967, for a review). According to these earlier theories, motivational values were decomposed into two independent parts – need or drive states, and incentive magnitudes. The needs included hunger, thirst, sex, and fear; which were manipulated by hours of food and water deprivation, sexual stimulation, and shock intensity with animals. The incentive was independently manipulated by varying the amount of food, water that could be consumed, or access to sexual gratification, or escape from shock. Furthermore, it was generally assumed that these two factors multiply to determine motivational value. Thus needs moderated the effect of incentives on motivational value, and reinforcement value was derived from need or drive reduction. Although these researchers understood the importance of formulating dynamic models for these motivational mechanisms, their descriptions remained largely informal and static.

Animal behaviorists made progress toward dynamic models of motivation by using feedback control theory (see McFarland 1971, 1974; & Toates 1975, for examples). These feedback control models were built upon Walter Cannon's idea of homeostasis. The basic idea was that organisms have set points or ideal levels for various need states. Consummatory behavior acts as an error correcting control variable that feeds back and reduces the discrepancy between the current and desired states. These theories were developed to explain consummatory behavior in animals such as eating, drinking, and foraging behavior. More recently, the basic ideas of feedback control were extended and applied to social psychological theories of motivation (Carver & Scheier 1981).

Research on human motivation was advanced by the development of a motivational theory called dynamics of action (Atkinson & Birch 1970). According to this theory, each type of activity is associated with an action tendency that has some strength at any point in time. The action with the greatest strength at any moment is expressed. Actions that are not expressed grow in strength according to a linear differential equation, producing deprivation. The action that is dominant, and is thus being expressed, decreases in strength in proportion to its consummatory response, producing satiation. This theory was designed to explain the stream of behavior, that is, the changes in activities in which humans engage from moment to moment (e.g., work versus play).

Consumer researchers made progress on issues relating human motivation to consumer purchases (see Kahn, Kalwani, & Morrison 1986; & McAlister 1982, for examples). These theories incorporated dynamic models of depriva-

tion and satiation into standard economic consumer choice models. Satiation was viewed as a household's accumulation of inventory for an attribute product, and deprivation was viewed as depleting this inventory. The value of a new purchase was determined by comparing the resulting inventory with some ideal point – value increased as the inventory approached the ideal point and it decreased as the inventory surpassed the ideal. The main purpose of these models was to explain brand switching and variety seeking observed in consumer panel data.

Most recently, Townsend (1992) incorporated mechanisms of deprivation and satiation into approach-avoidance models of movement behavior. These models generally assumed that the attraction and aversion toward a goal depended on the distance to each goal (Miller 1959; Townsend & Busemeyer 1989). Townsend's theory differs from these earlier theories by adding the assumption that the goal is partly consumed during the approach so that need for a goal also varies depending on the distance from the goal. Approach-avoidance models were designed to describe continuous changes in position and velocity of movement behavior toward competing goal objects in physical space (see McFarland & Bosser 1997).

Despite the relevance of the above motivational theories for understanding the source and dynamic nature of utilities, they have had little impact on traditional decision research. One important reason is that motivational theories and decision theories have not been systematically integrated into a common framework. The purpose of this chapter is to make some preliminary progress towards this integration.

Decision field theory

The proposed theory is an extension of a dynamic cognitive model of decision making that has been applied to a variety of traditional decision making problems including decision making under uncertainty (Busemeyer & Townsend 1993), selling prices and certainty equivalents (Townsend & Busemeyer 1995), multi-attribute decision making (Diederich 1997), and multi-alternative decision making (Roe, Busemeyer, & Townsend 2001). However, all of the previous applications of the theory treated the values entering the decision process as fixed over time. This chapter describes how these values change over time in response to external environmental stimulation, and internal deprivation-satiation mechanisms. The dynamic character of decision field theory makes it a natural candidate for incorporating these motivational mechanisms.

Figure 1 provides a diagram of the proposed cognitive-motivational network. All of these elements will be described in more detail below in a step by step manner. Here we simply outline the general idea. At the far left, the needs for an attribute (denoted N) and the quantity of need reduction produced by an action (denoted Q) combine to influence motivational values (denoted M). The motivational values and attention weights (denoted W) combine to influence valence (denoted V). The valence and previous preference state combine to generate a new preference state (denoted P). The preference state guides behavior (denoted B). Finally, past behavior, environmental goal stimulation (denoted G), and previous needs influence current needs. We begin the detailed presentation of this entire process with a description of how a decision is made.

Decision Rule. According to decision field theory, each option is associated with a preference strength, denoted P_i for option i, which could range from positive (attractive) to negative (repulsive), with zero representing a neutral state. The collection of preferences for all of the options form a preference state (a column vector) denoted $\boldsymbol{P}$. Considering the movie choice example, the preference state is a three dimensional (column) vector consisting of prefer-

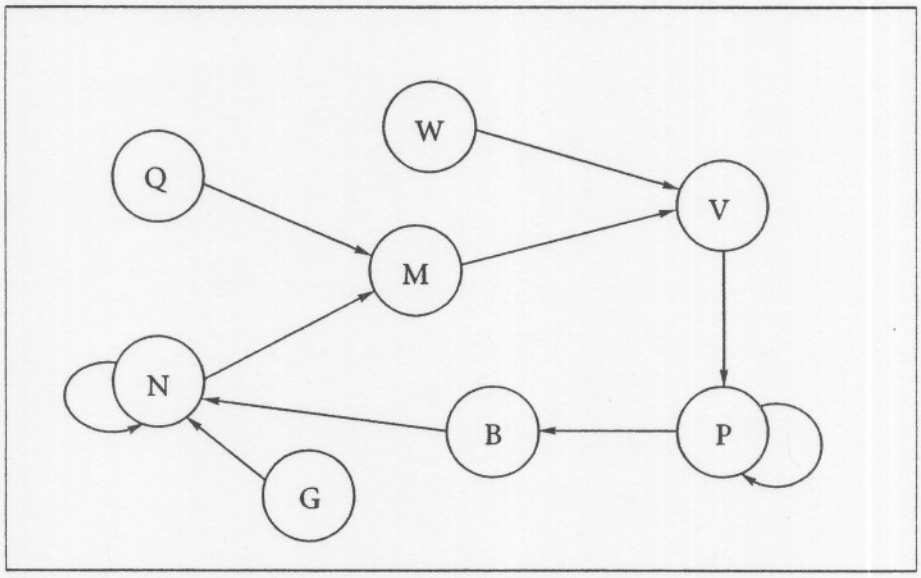

Figure 1. Cognitive-motivational network. The attribute values and needs combine to influence motivational values, the motivational values and attention weights combine to influence valence, valence and previous preference state combine to generate a new preference state, preference influences behavior, past behavior, environmental stimulation, and previous needs influence current needs. Q = attribute values, N = attribute needs, M = motivational values, W = attention weights, V = valences, P = preferences, B = behavior, G = environmental stimulation.

ence strengths for drama, comedy, and action. The preference state at the start of the decision process is denoted $P(t_0)$, the preference state at any later time point prior to making the final decision is denoted $P(t)$.

A decision is made a follows. The process starts with the initial preference state, $P(t_0)$, which may be biased by recall of preferences from past decisions. Then during the deliberation period, the preference state changes from one time moment, $P(t)$, to later time moment, $P(t+h)$, as the decision maker anticipates the consequences of each option and accumulates the anticipated affective values. This deliberation process continues until the strength of preference for one of the options exceeds a threshold bound at time T (see Figure 2). The first option to exceed the bound is chosen, and the time required for the first option to reach the bound determines the decision time, $DT = (T - t_0)$.

The choice probabilities and mean decision times are derived from the first passage time distributions of the resulting stochastic process (Busemeyer &

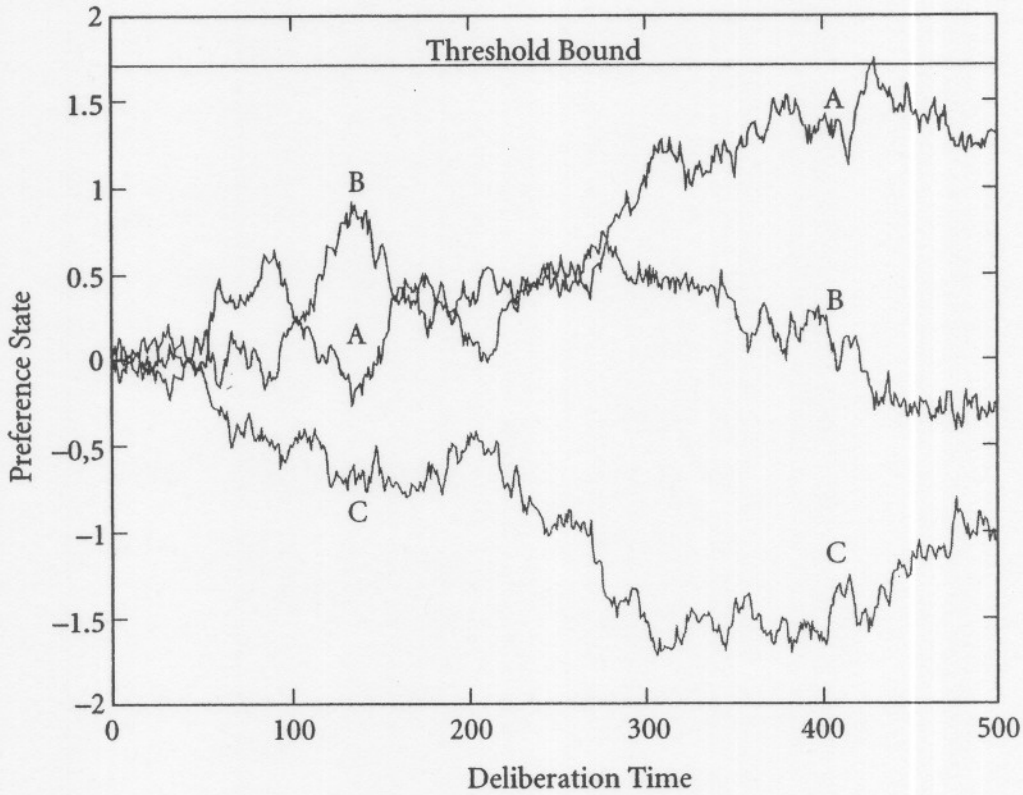

Figure 2. Stopping rule for making a decision. The horizontal axis represents decision time, and the vertical axis represents preference strength. Each trajectory represents the evolution of preference for one of the three options. In this figure, option A is the first option to reach the threshold bound (flat top line), and so this option would be chosen at time t = 425.

Townsend 1992; Busemeyer & Diederich 2001). This decision process characterizes a wide range of models for decision-making in cognitive psychology (see Link 1992; Ratcliff 1978; Smith 1995; Nosofsky & Palmeri 1997; Ashby 2000).

The threshold bound for stopping the deliberation process is a criterion that the decision maker can use to control the speed and accuracy of a decision. If the threshold is set to a very high value, then a very strong preference is required to make a decision. This high criterion will require accumulating more information, and thus generally lead to more thoughtful decisions, but at the cost of longer decision times. If the threshold bound is set to a very low criterion, then only a weak preference is required to reach a decision. This low criterion requires little information, and thus generally leads to less thoughtful decisions, but with less time. A high threshold bound is used to make important decisions entailing very high stakes, and a lower threshold bound is used for less important decisions that must be made quickly. Furthermore, prudent decision makers tend to use higher thresholds, whereas impulsive decision makers tend to use lower thresholds.

Evolution of Preferences. The preference state is assumed to change and evolve during the deliberation according to the following linear dynamic difference equation:

$$P(t+h) = S \cdot P(t) + V(t+h) \tag{1}$$

This model states that the new preference state is a linear combination of the previous preference state and the new input valence, denoted $V(t+h)$. The matrix S allows for feedback produced by the previous preference state on the new state. It serves three critical purposes in the model. First, it controls the rate of growth and decay of preferences over time during deliberation (Busemeyer & Townsend 1992). Second, it incorporates goal gradient parameters that are used to account for differences in approach-avoidance types of conflicts (Busemeyer & Townsend 1993). Third, it allows for lateral interconnections among options to produce a competitive network (Roe et al. 2001). See the previously mentioned articles for a more detailed discussion and justification for this part of the model. The present chapter is focused primarily on the important role of the second term, called the valence vector, denoted $V(t)$, described next.

Valence. The input valence vector is composed of a product that has three independent parts:

$$V(t) = C(t) \cdot M(t) \cdot W(t) \tag{2}$$

The first matrix, called the contrast matrix and denoted $C(t)$, represents the process used to compare options. If pair wise comparisons are made serially

over time, then one row of $C(t)$ is used to form the current paired comparison, and the remaining rows of are set to zero. For example, setting

$$C(t_1) = \begin{bmatrix} 1 & -1 & 0 \\ 0 & 0 & 0 \\ 0 & 0 & 0 \end{bmatrix}, \quad C(t_2) = \begin{bmatrix} 0 & 0 & 0 \\ 0 & 1 & -1 \\ 0 & 0 & 0 \end{bmatrix}, \quad C(t_3) = \begin{bmatrix} 0 & 0 & 0 \\ 0 & 0 & 0 \\ -1 & 0 & 1 \end{bmatrix}$$

produces pair wise comparisons between options 1 versus 2 at time t_1, options 2 versus 3 at time t_2, and options 3 versus 1 at time t_3. In this case, $C(t)$ changes from moment to moment to represent the different pair wise comparisons across time. Alternatively, if it is assumed that all three options are processed in parallel, then each option is compared to the average of the remaining options. This is achieved by setting

$$C(t) = \begin{bmatrix} 1 & -.5 & -.5 \\ -.5 & 1 & -.5 \\ -.5 & -.5 & 1 \end{bmatrix}$$

In this second case, the contrast matrix is fixed across time. (Note that the parallel contrast matrix is the expectation over all the possible serial contrast matrices).

The second matrix, called the motivational value matrix denoted $M(t)$, represents the motivational values of each option on each attribute. Considering the movie choice example, the motivational value matrix would consist of three rows and four columns, each row representing an option (drama, comedy, action), and each column representing an attribute (romance, humor, excitement, fearfulness). Each cell, $m_{ij}(t)$, of this matrix represents the value of an option on an attribute (e.g., the motivational value of drama on romance). This is similar to a multi-attribute table posited in utility theories, except that these values may change dynamically over time. This is the major innovation to be introduced in the present chapter, and we will return to a detailed description of this component after describing the last term in Equation 2.

The last matrix, called the weight vector denoted $W(t)$, represents the amount of attention allocated to each attribute at each moment. Considering the movie choice example, then $W(t)$ is column vector with four elements, with each element representing the amount of attention allocated to one of the attributes (attention to the romantic, humorous, exciting, and fearful aspects of each movie). Again this is similar to the importance weights posited in utility theories, except that these weights change dynamically over time. At one moment at time t, the decision maker may focus on the romantic aspects of each movie (e.g., $w_1(t) = 1$ and other weights zero), but at another moment, $t + h$, attention may switch to the exciting aspects of each movie (e.g., $w_2(t + h) = 1$

and all other weights zero). Thus the weight vector changes from moment to moment reflecting the momentary changes in attention to each attribute. Formally, the weight vector is assumed to be a stationary stochastic process. The mean of the weight vector represents the average amount of attention allocated to each attribute, and this is assumed to be a function of the importance or probability of each attribute.

Motivational Values. It is now time to return to the specifications for the sources of the motivational value matrix, $M(t)$. First it is assumed that each individual has accumulated some experience with each attribute to produce a current degree of attainment (level of satisfaction or dissatisfaction) with each attribute, denoted $a_j(t)$ for attribute j. The attribute state vector, denoted $A(t)$, represents the collection of all of these attainment levels for all the attributes. Considering the movie choice example, $A(t)$ is a four dimensional vector representing an individual's cumulative experience with movies regarding romance, humor, excitement, and fear attributes. For example, the individual may have watched too many action movies lately, and may feel tired of the mindless excitement produced by that type of movie.

Second, it is also assumed that each individual has an ideal level for each attribute, denoted L_j, for attribute j. Collecting these ideal levels across attributes produces an ideal point, denoted L, in the attribute space. For the movie choice example, L is a four dimensional vector representing an individual's ideal levels for experiencing romance, humor, excitement, and fear when watching movies.

Third, it is assumed that there exists a need state, denoted $N(t)$, which is a vector representing the needs on each of the attributes. Each element, $n_j(t)$, of the vector $N(t)$ represents the need for a particular attribute. For example, an individual's current level of excitement may lie below his ideal level, and thus she feels a need to experience more excitement. The needs may be positively or negatively signed, depending on whether or not the current state is below or above the desired state. For example, an individual's current level of experienced fear may be higher than her ideal level, and so she may wish to walk out to avoid watching the rest of a horror movie. The needs are updated according to the linear dynamic system

$$N(t+h) = L \cdot N(t) + G(t+h) - A(t+h) \tag{3}$$

The last term in the above equation, $G(t+h)$, represents the change in goals produced by environmental stimulation (e.g., stress from losing a job, enticements by advertisements).

The fourth assumption concerns the quantity of change in attribute state that is consumed by choosing an option. The parameter, q_{ij}, denotes the quan-

tity of change in attribute j produced by choosing option i. For example, watching an intense action movie may produce a big increase in an individual's current state of excitement; avoiding a terrorizing horror movie may produce a big reduction in fear. The matrix Q represents the quantities for each option on each attribute. Finally, the motivational values are determined from the matrix product

$$M(t) = Q \cdot \mathrm{Diag}[N(t)] \tag{4}$$

In other words, the motivation value produced by an option on an attribute equals the product of the attribute need and the quantity produced by the option, $m_{ij}(t) = n_j(t) \cdot q_{ij}$.

There are several properties to note about Equation 3. First, it reproduces the multiplicative model for need and incentives, adopted by the early neobehaviorists. Second, the motivational values move the decision maker in the direction of need reduction, reducing the distance between the current and ideal states, and so Equation 3 also serves as a feedback control loop. Third, the need state can also be interpreted as differences between the current and desired inventory levels in a household for some product attribute, consistent with the earlier consumer choice models. Finally, note that if the needs are equal in magnitude and constant across time, then the motivational values are fixed and static quantities like those assumed by classic utility theories.

The last remaining theoretical issue is the problem of specifying how the attribute states change across time. Three factors are assumed to influence the new attribute state: the previous attribute state, new changes in state produced by past behavior, and new environmental stimulation. The attribute state is assumed to change across time according to the following linear dynamic model:

$$A(t+h) = F \cdot A(t) + Q' \cdot B(t) \tag{5}$$

The last term of Equation 5 represents the effect of past actions on the current attribute state. The vector, $B(t)$, indicates which, if any, choice occurred in the previous moment. For example, if the first option, say drama, was chosen at time t_1, then $b_1(t_1) = 1$ and all the other elements of $B(t_1)$ are zero. Alternatively, if the third option, say the action movie, was chosen at time t_2, then $b_3(t_2) = 1$ and other elements of $B(t_2)$ are zero. The product, $Q' \cdot B(t)$, simply selects the row of quantitative changes in attributes produced by the behavior that occurred at time t.

The feedback matrix F in the first term of Equation 4 determines how the previous attribute state affects the new attribute state. For example, if F is set equal to an identity matrix, $F = I$, then the new state would simply equal the

previous state plus the adjustments from the environment and behavior. However, in this case all past environmental events and behaviors have equal impact on the current state, independent of when they occurred. In other words, this simple case produces perfect memory for past outcomes. If F is proportional to the identity matrix, $F = \alpha I$ with $0 < \alpha < 1$, then the impact of a past outcome decays exponentially with the age of its experience, producing recency effects and limited memory for past outcomes. Finally, if F is a symmetric matrix with non-zero off diagonal entries, $f_{jk} = f_{kj}, j \neq k$, then these off diagonal entries allow for substitution effects: f_{jk} represents the partial fulfillment of attribute j indirectly gained by satisfying attribute k. For example, experiencing an exciting action movie could lead to a reduced need for watching a fearful horror movie and visa-versa.

The dynamic model expressed in Equation 4 shares properties with the earlier dynamics of action theory. Both use linear dynamic systems to describe growth of states over time and consummation of states produced by actions. Furthermore, both allow for substitution effects so that consummation of one attribute may also reduce the need for other related attributes. The main differences between the theories are the mechanisms for making decisions. Decision field theory postulates two integrated dynamical systems for making choices – a dynamical evolution for preference state, and a dynamic process for need state. In contrast, dynamics of action theory postulates only one dynamical system – action tendencies (which correspond most closely to our need states). Excluding the preference state dynamics makes applications to decision research difficult for the dynamics of action theory.

Theoretical Derivations. Now we consider how the two interlinked dynamic processes – preference states driven by motivational values, and motivational values driven by needs – work altogether to influence choice (see Figure 1). We will restrict our analysis to the evolution of the mean preference state over time. Although the choice probabilities are partly dependent on the means, they also are partly dependent on the covariance matrix for preferences (see, Busemeyer & Townsend 1993; Roe, et al. 2001). However, deriving the latter involves technical derivations that go beyond the intended scope of this chapter. Derivations regarding the mean preference state are fairly straightforward. First we derive the asymptotic mean preference state for the current choice. Then we examine how the dynamic properties of the needs moderate the asymptotic mean preference for the current choice. In all of the following derivations, the expression $E[X]$ symbolizes the expectation of the random vector X.

First we derive from Equation 1 the asymptotic mean preference state for a choice that starts at time t_0, allowing the needs to be changing dynami-

cally before that point in time, but fixed during the deliberation period. The expectation for the last term in Equation 1 is:

$$E[V(t+h)] = E[C(t) \cdot M(t) \cdot W(t)] = E[C(t) \cdot Q \cdot \mathrm{Diag}[N(t)] \cdot W(t)].$$

The comparison process, $C(t)$, is assumed to be a stationary process with a mean equal to $E[C(t)] = C$, which is statistically independent of the other processes. This allows us to factor it out of the expectation and rewrite the above equation as

$$E[V(t+h)] = C \cdot Q \cdot E[\mathrm{Diag}[N(t_0)] \cdot W(t)].$$

Note that $N(t_0)$ is assumed to be fixed after time t_0, so it can also be factored out of the expectation to yield:

$$E[V(t+h)] = C \cdot Q \cdot \mathrm{Diag}[N(t_0)] \cdot E[W(t)].$$

The attention weights are assumed to fluctuate according to a stationary stochastic process with a mean equal to $E[W(t)] = w$, and replacing this in the above equation yields:

$$E[V(t+h)] = C \cdot Q \cdot \mathrm{Diag}[N(t_0)] \cdot w.$$

Returning to Equation 1, the mean preference state now can be expressed as

$$E[P(t+h)] = S \cdot E[P(t)] + E[V(t+h)] = S \cdot E[P(t)] + C \cdot Q \cdot \mathrm{Diag}[N(t_0)] \cdot w.$$

The asymptotic solution to this vector difference equation is

$$E[P(\infty)] = (I - S)^{-1} \cdot C \cdot Q \cdot \mathrm{Diag}[N(t_0)] \cdot w. \tag{5a}$$

To simplify this expression a bit, suppose that $S = (1-s) \cdot I$, so that Equation 5 reduces to

$$E[P(\infty)] = (s^{-1}) \cdot C \cdot Q \cdot \{\mathrm{Diag}[N(t_0)] \cdot w\}. \tag{5b}$$

In this case, Equation 5b implies the following simple expression for the preference strength of option i:

$$E[P_i(\infty)] = (3/2) \cdot (s^{-1}) \cdot (v_i - \mu) \tag{5c}$$

where

$$v_i = \Sigma_j n_j(t_0) \cdot w_j \cdot q_{ij} \qquad \text{and} \qquad \mu = (v_1 + v_2 + v_3)/3. \tag{5d}$$

In short, the asymptotic mean preference for option i is linearly related to the weighted average of the attribute values for that option, denoted v_i in Equation 5d. But the weights of each attribute are modified by the needs, which

change depending on the timing of past environmental stimuli and past consummatory behaviors (governed by Equation 4). The idea of shifting importance weights depending on the emotional needs involved in the decision is consistent with earlier research (Luce, Payne, & Bettman 1999) and theories on affect and decision making (Loewenstein 1986).

Applications to research on affect and decision making

Rage and Reason (Goldberg et al. 1999). There are two purposes for this application. One is to illustrate how the theory works with a concrete example that is made a simple as possible. The second reason is to illustrate some of the dynamic properties of the model that could be used for future tests. The reported experiment did not empirically evaluate the dynamic properties needed to test the theory, and so this application is not intended to provide evidence for the present theory.

Recall that in this experiment, the decision maker first witnessed a violent crime for which the perpetrator was convicted or not convicted, and this was followed by a decision about an independent negligence case. To model this experiment, denote t_v as the time point marking the end of the presentation of the violent crime film, and denote $t_0 > t_v$ as the later time point when a penalty decision about a negligence case was presented.

Suppose the decision regarding the penalty for the negligence case is based on two attributes, one is the level of punishment (needed for crime prevention), and the second is compassion (needed for human nature). For simplicity, we assume equal attention weight ($w_p = w_c = .50$) allocated to each attribute, and also for concreteness, the quantities shown in Table 2 are used to measure the effects of the three options on the two attributes. These particular weights and quantities are not at all critical – the main requirement is to make the medium penalty most preferred when the needs are equated. Inserting these parameters into Equation 5d yields:

$$\begin{aligned} v_{\text{low}} &= (.5)(10)n_p(t) + (.5)(90)n_c(t), \\ v_{\text{med}} &= (.5)(40)n_p(t) + (.5)(70)n_c(t), \\ v_{\text{high}} &= (.5)(50)n_p(t) + (.5)(10)n_c(t). \end{aligned} \tag{6}$$

The ideal levels for compassion and punishment are both set equal to $L_1 = L_2 = 1$, however, this simply changes the levels of the prediction curves, and any positive value will produce the same qualitative pattern of results. The ex-

perimental condition in which the perpetrator goes unpunished for the violent crime produces an environmental stimulant, $G(t_v) = [-g\ 0]'$, that reduces the attribute level for punishment, thus arousing a need for punishment. Thus g is a parameter representing the magnitude of the stimulation produced by the violent film. The need for punishment and need for compassion are assumed to be inversely related, and this is modeled by setting $f_{11} = f_{22} = \alpha$, and $f_{21} = f_{12} = -\alpha$ in the feedback matrix F in Equation 4 (however, setting $F = \alpha I$ produces virtually the same result). The parameter α determines the rate of decay of the stimulation. We will examine the model predictions for a range of parameters values corresponding to g (the magnitude of stimulation) and α (the decay rate).

Inserting these assumptions into Equation 4 and Equation 5d produces the predictions from the model shown in Figure 3. The horizontal axis in the figure represents the time delay between presentation of the violent film and the penalty decision $(t_0 - t_v)$, and the vertical axis represents the preference strength for a severe penalty (as compared to preferences for moderate or weak). Each curve represents a different magnitude of stimulation, and each panel represents a different rate of decay. As can be seen in the figure, the model predicts that soon after stimulation, the severe penalty is preferred, but this effect exponentially decreases as a function of the delay. Furthermore, the severe penalty is preferred only when the stimulation is large in magnitude. Increasing the magnitude of the stimulation increases the persistence, but eventually all these effects decay away in time. These results are in general accord with Goldberg et al. (1999), however they did not examine the time course of the effect that they observed. This temporal manipulation would provide stronger tests of the present theory.

Cognitive-Motivational Conflicts (Read & van Leeuwen 1998; Shiv & Fedorikhin 1999). The purpose of this application is to show how the theory accounts for the cognitive and motivational interactions that result in preference reversals. Recall that in these experiments, decision makers chose between unhealthy (e.g., fudge cake) versus healthy (e.g. fruit) snacks under different

Table 2. Multiattribute table for the penalty decision for negligence.

	Attributes	
Options	Punishment	Compassion
Low Penalty	10	90
Medium Penalty	40	70
High Penalty	50	10

hunger states. This decision can be analyzed on the basis of two attributes – one is hunger craving and the other is a concern for health. According to Equation 5d, the asymptotic mean preference for this decision will be determined by the difference

$$v_{\text{Unhealthy Snack}} - v_{\text{Healthy Snack}}$$
$$= w_{\text{Hunger}} \cdot (q_{\text{High Taste}} - q_{\text{Low Taste}}) \cdot n_{\text{Hunger}} - w_{\text{Health}} \cdot (q_{\text{High Health}} - q_{\text{Low Health}}) \cdot n_{\text{He}}$$

where $(w_{\text{Hunger}}, w_{\text{Health}})$ represent the average attention weights for the hunger craving and health reasons attributes, $(n_{\text{Hunger}}, n_{\text{Health}})$ represent the needs for

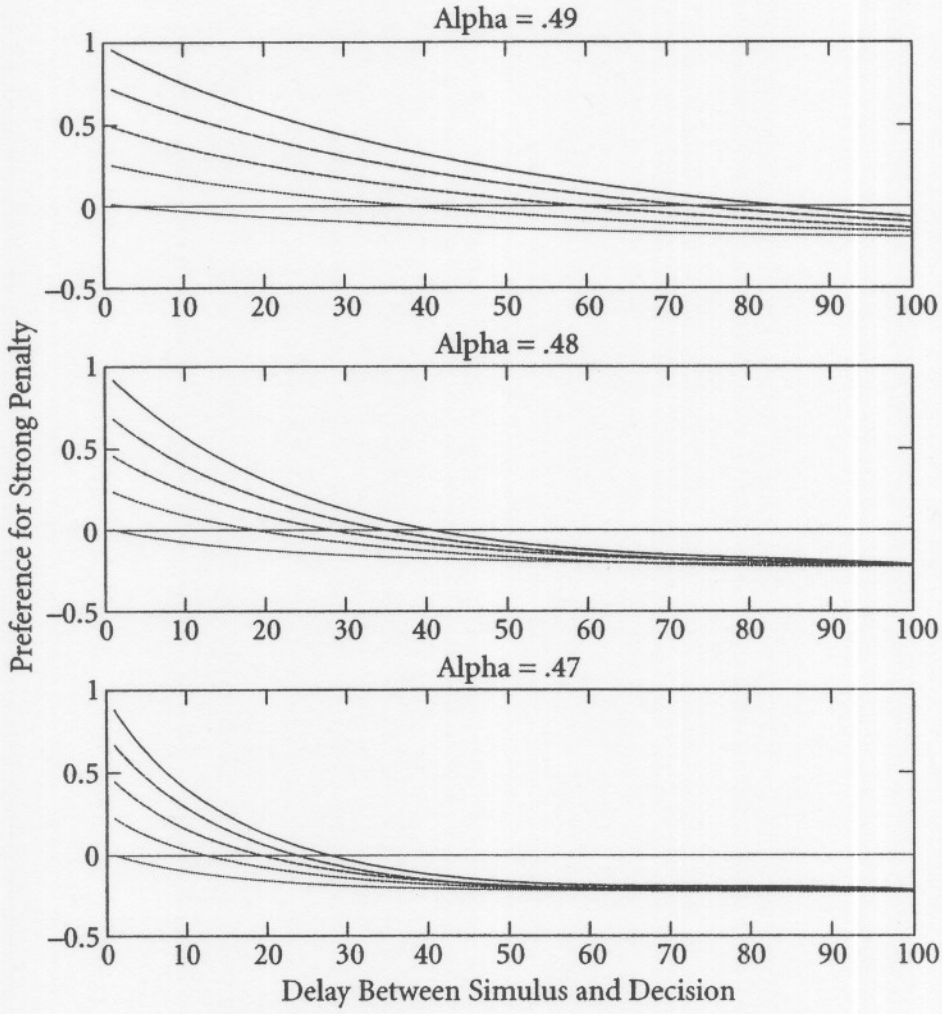

Figure 3. Predictions for the Goldberg et al. (1999) experiment. The horizontal axis represents the time delay between the stimulation and the penalty decision. The vertical axis represents preference for the most severe penalty. Each curve is produced by a different magnitude of stimulation, and each panel is produced by a different decay rate. The horizontal line represents the average preference, averaged across all three penalty choices.

these attributes, and the q's represent the quantitative changes produced by each option on each attribute.

The results of Read and van Leeuwen (1998) are explained as follows. The immediate versus delayed consumption of the snacks manipulates the reward value of the unhealthy snack, $q_{\text{High Taste}}$ – its value is much reduced under the delay condition. The timing of the decision (before versus after lunch) manipulates the need state for hunger, n_{Hunger}. When the snack is immediately available, then reward value for the snack, $q_{\text{High Taste}}$, is so large that it is generally preferred, even under low need for hunger. When the reward value is reduced by delay, but the hunger need, n_{Hunger}, is high, then the latter compensates for the former, producing a preference for the unhealthy snack. When both the hunger need and the reward value are low, then there is no motivational value for choosing the unhealthy snack, and the healthy snack is preferred.

The results of Shiv and Fedorikhin (1999) require a slightly different explanation. The presentation of the snacks (displaying real snacks versus only showing a photo) manipulates the stimulation of the hunger need, n_{Hunger}. The memory load (low versus high load) manipulates the amount of attention, w_{Health}, given to the reasons for the healthy snack – more attention can be given to thinking of health related reasons under the low memory load condition. When the memory load is low, sufficient attention can be given to health related reasons, the large weight, w_{Health}, causes the healthy snack to be generally preferred. When the memory load is high, lowering the weight w_{Health} for health reasons, then hunger stimulation has a major effect. High stimulation produces a high hunger need, n_{Hunger}, producing a preference for the unhealthy snack; low stimulation produces a low hunger need, producing a preference for the healthy snack.

In sum, according to Equation 7, the manipulations of the need for hunger shift the weight given to the hunger attribute, which causes the reversal of preference. The above analyses generally agree those provided by Read and van Leeuwen's (1998) and Shiv and Fedorikhin (1999). The purpose of this presentation is to make linkages between this previous research and the present theory.

Variety Seeking Consumer researchers have long been interested in the problem of variability in consumer choice including brand switching, switching among product variants, switching among services, and switching among activities. Although there are many reasons for this variation (including probabilistic choice, curiosity, and product learning), one of the main explanations is the mechanism of deprivation-satiation (see McAlister & Pessemier 1982, for a review). Rigorous quantitative comparisons of the proposed motivational

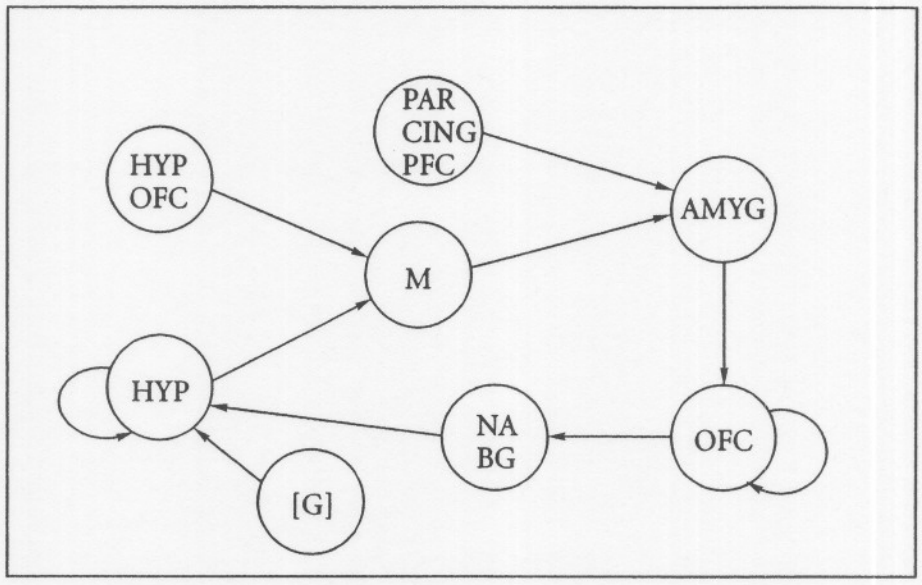

Figure 4. Suggestions for the neurophysiological basis of Figure 1. HYP = hypothalamus, OFC = orbitofrontal cortex, BF = basal forebrain, CING = cingulated cortex, PAR = parietal cortex, PFC = prefrontal cortex, AMYG = amygdala, NA = nucleus accumbens, BG = basal forbrain. [G], not part of the physiological basis of Figure 1, but retained from Figure 1 itself, refers to the environmental need stimuluation.

theory with earlier theories of variety seeking are planned using consumer purchases from scanner data in future research.

Neurophysiological basis

We would like to conclude this chapter with some suggestions concerning the neuro-physiological mechanisms corresponding to the cognitive – motivational network shown in Figure 1. Our initial guesses are shown in Figure 4, although these must be treated in a very tentative manner. Some of these ideas are based on previous theorizing and integrations of neurophysiological studies by Rolls (1999).

In general, the cognitive – motivational network would be implemented in distributed brain circuitry, and single nodes in the network would correspond to integrated neural systems rather than to specific brain regions. At the cortical level, this circuitry would include the orbitofrontal cortex as well as other prefrontal regions, cingulate cortex, temporal cortex, and at subcortical levels, the hypothalamus, basal forebrain, neostriatum (basal ganglia) and the archistriatal nucleus accumbens. Some candidate regions are identified below, although

it should be borne in mind that these regions are not meant to be considered in isolation, but as part the neural circuits with which they are imbedded.

The hypothalamus is one candidate for basic physiological homeostatic mechanisms such as hunger that correspond to the attribute needs (denoted N in Figure 1), although other systems would be involved in higher or more abstract level needs. For example, the frontal and temporal cortexes would be involved in more long term and abstract needs (i.e., achievement, intellectual satisfaction, social stimulation), which would rest on rational linguistic and memory systems. The hypothalamus and orbitofrontal cortex may implement some aspect of the reward value of an action (denoted Q in Figure 1) – with various regions of the hypothalamus being important for specific physiological needs, and the orbitofrontal cortex representing the rewarding properties of primary reinforcers and connecting these to action selection. The motivational value of a stimulus (denoted M in Figure 1) may be realized by a hypothalamus and the basal forebrain memory system. These influences would combine with attention weights (denoted A in Figure 1) perhaps perhaps put into action by the ascending noradrenergic attentional system including in the cingulated, parietal, and frontal cortexes. The combination of the motivational value and attention weights would then determine the valence (denoted V in Figure 1) implemented neurophysiologically in the amydala, and then in turn leading to a new preference state (denoted P in Figure 1), an idea similar to the preference ranking functions of the orbitofrontal cortex, which can modify stimulus-reinforcement relationships as conditions change. Finally, behavior (denoted B in Figure 1) would be influenced by and ultimately selected via the output systems of the brain regions mentioned above, including the ventral striatum (nucleus accumbens), which is an output structure for the amygdala and orbitofrontal cortex essential allowing rewarding properties of stimuli to influence action, and by the neostriatum, including the caudate nucleus and putamen, which are output structures for neocortical regions such as the sensorimotor cortexes and association cortex. The selection of behaviors via these striatal systems would then lead to implementation of behavioral goals via the decending voluntary motor control system which influences and coordinates specific muscle activity for movement.

Concluding comments

The purpose of this chapter was to outline the beginnings of a theory of decision-making that identifies some of the sources of subjective value or util-

ity. The sources that we identified are the external environmental stimulation of needs, and the internal deprivation and satiation of needs. At this point the theory is tentative, and further experimental testing is required. Nevertheless, new tests cannot be designed without first putting down some formal hypotheses. The main contribution of this work will be to provide hypotheses for future research.

References

Ashby, F. G. (2000). A stochastic version of general recognition theory. *Journal of Mathematical Psychology, 44*, 310–329.

Atkinson, J. W., & Birch, D. (1970). *The Dynamics of action*. NY: Wiley.

Berkowitz, L. (1993). Towards a general theory of anger and emotional aggression: Implications of the Cognitive-neoassoaciationistic perspective for the analysis of anger and other emotions. In R. S. Wyer & T. K. Srull (Eds.), *Advances in Social Cognition*, Vol. 6 (pp. 1–46). Hillsdale NJ: Erlbaum.

Busemeyer, J. R., & Townsend, J. T. (1992). Fundamental derivations from decision field theory *Mathematical Social Sciences, 23*, 255–282.

Busemeyer, J. R., & Townsend, J. T. (1993). Decision Field Theory: A dynamic cognition approach to decision making. *Psychological Review, 100*, 432–459.

Busemeyer, J. R., & Diederich, A. (2001). Survey of decision field theory. Manuscript under review for *Mathematical Social Sciences*.

Carver, C. S., & Sheier, M. F. (1981). Attention and self – regulation: A control theory approach to human behavior. NY: Springer.

Cofer, C. N., & Appley, M. H. (1967). Motivation: Theory and Research. NY: Wiley.

Diederich, A. (1997). Dynamic stochastic models for decision making under time constraints. *Journal of Mathematical Psychology, 41*(3), 260–274.

Goldberg, J. H., Lerner, J. S., & Tetlock, P. E. (1999). Rage and reason: The psychology of the intuitive prosecutor. *European Journal of Social Psychology, 29*, 781–795.

Kahn, M., Kalwani, U., & Morrison, D. (1986). Measuring variety seeking and reinforcement behaviors using panel data. *Journal of Marketing Research, 23*, 89–100.

Kahneman, D., & Tversky, A. (1979). Prospect theory: An analysis of decision under risk. *Econometrica, 47*, 363–391.

Keeney, R. L., & Raiffa, H. (1976). *Decisions with multiple objectives: Preference and value tradeoffs*. New York: John Wiley & Sons.

Lewinsohn, A., & Mano, H. (1993). Multiattribute choice and affect: The influence of naturally occurring and manipulated mood on choice processes. *Journal of Behavioral Decision Making, 6*, 33–52.

Link, S.W. (1992). *The wave theory of difference and similarity*. Hillsdale, NJ: Lawrence Erlbaum Associates

Loewenstein, G., & Lerner, J. S. (2000). Emotions and decision making. In R. Davidson, K. Sherer, & H. Goldsmith (Eds.), *Handbook of affective science*. NY: Oxford University Press.

Loewenstein, G. (1986). Out of control: Visceral influences on behavior. *Organizational Behavior and Human Decision Processes, 65*, 272–292.

Luce, M. F., Bettman, J. R., & Payne, J. W. (1997). Choice processing in emotionally difficult decisions. *Journal of Experimental Psychology: Learning, Memory, & Cognition, 23*, 384–405.

Luce, M. F., Payne, J. W., & Bettman, J. R. (1999). Emotional trade-off difficulty and choice. *Journal of Marketing Research, 36*, 143–159.

Markman, A. B., & Brendt, C. M. (2000). The influence of goals on value and choice. In D. L. Medin (Ed.), *The psychology of learning and motivation*, Vol. 39 (pp. 97–139). San Diego, CA: Academic Press.

McAlister, L. (1982). A dynamic attribute satiation model of variety behavior. *Journal of Consumer Research, 9*, 141–150.

McAlister, L., & Pessemier, E. (1982). Variety seeking behavior: An interdisciplinary review. *Journal of Consumer Research, 9*, 311–322.

McFarland, D. J. (1971). *Feedback mechanisms in animal behavior*. NY: Academic Press.

McFarland, D. J. (1974). *Motivational control systems*. Academic Press.

McFarland, D. J., & Bosser, T. (1997). *Intelligent behavior in animals and robots*. Cambridge: MIT Press.

Mellers, B. A., Ordonez, L. D., & Birnbaum, M. H. (1992). A change-of-process theory for contextual effects and preference reversals in risky decision making. *Organizational-Behavior-and-Human-Decision-Processes 1992, 52*, 331–369.

Miller, N. E. (1959). Liberalization of basic S-R concepts: Extensions to conflict behavior, motivation and social learning. In S. Koch (Ed.), *Psychology: A study of science*, Vol. 2 (pp. 196–292). NY: McGraw - Hill,

Nosofsky, R. M., & Palmeri, T. J. (1997). An exemplar based random walk model of speeded classification. *Psychological Review, 104*, 266–300.

Payne, J. W., Bettman, J. R., & Johnson, E. J. (1993). *The adaptive decision maker*. NY: Cambridge University Press.

Ratcliff, R. (1978). A theory of memory retrieval. *Psychological Review, 85*, 59–108.

Read, D., & van Leeuwen, B. (1998). Predicting hunger: The effects of appetite and delay on choice. *Organizational Behavior and Human Decision Processes, 76*, 189–205.

Roe, R., Busemeyer, J. R., & Townsend, J. T. (2001). Multi-Alternative Decision Field Theory: A Dynamic Connectionist Model of Decision-Making. *Psychological Review, 108*, 370–392.

Rolls, Edmund T. (1999). *The Brain and Emotion*. Oxford: Oxford University Press.

Shiv, B., & Fedorikhin, A. (1999). Heart and mind in conflict: The interplay of affect and cognition in consumer decision making. *Journal of Consumer Research, 26*, 278–292.

Slovic, P. (1995). The construction of preference. *American Psychologist, 50*, 364–371.

Smith, P. L. (1995). Psychophysically principled models of visual simple reaction time. *Psychological Review, 102*(3), 567–593.

Townsend, J. T. (1992). Don't be phased by PHASER: Beginning exploration of a cyclic motivational system. *Behavioral Research Methods, Instrumentation, & Computers, 24*, 219–227.

In the series ADVANCES IN CONSCIOUSNESS RESEARCH (AiCR) the following ti have been published thus far or are scheduled for publication:

21. HUTTO, Daniel D.: *Beyond Physicalism.* 2000.
22. ROSSETTI, Yves and Antti REVONSUO (eds.): *Beyond Dissociation. Interaction betw dissociated implicit and explicit processing.* 2000.
23. ZAHAVI, Dan (ed.): *Exploring the Self. Philosophical and psychopathological perspect on self-experience.* 2000.
24. ROVEE-COLLIER, Carolyn, Harlene HAYNE and Michael COLOMBO: *The Devei ment of Implicit and Explicit Memory.* 2000.
25. BACHMANN, Talis: *Microgenetic Approach to the Conscious Mind.* 2000.
26. Ó NUALLÁIN, Seán (ed.): *Spatial Cognition. Selected papers from Mind III, Ann Conference of the Cognitive Science Society of Ireland, 1998.* 2000.
27. McMILLAN, John and Grant R. GILLETT: *Consciousness and Intentionality.* 2001.
228. ZACHAR, Peter: *Psychological Concepts and Biological Psychiatry. A philosoph analysis.* 2000.
29. VAN LOOCKE, Philip (ed.): *The Physical Nature of Consciousness.* 2001.
30. BROOK, Andrew and Richard C. DeVIDI (eds.): *Self-reference and Self-awareness.* 2C
31. RAKOVER, Sam S. and Baruch CAHLON: *Face Recognition. Cognitive and compı tional processes.* 2001.
32. VITIELLO, Giuseppe: *My Double Unveiled. The dissipative quantum model of the br* 2001.
33. YASUE, Kunio, Mari JIBU and Tarcisio DELLA SENTA (eds.): *No Matter, Never Mı Proceedings of Toward a Science of Consciousness: Fundamental Approaches, Tokyo, 1* 2002.
34. FETZER, James H.(ed.): *Consciousness Evolving.* 2002.
35. Mc KEVITT, Paul, Seán Ó NUALLÁIN and Conn MULVIHILL (eds.): *Language, Vis and Music. Selected papers from the 8th International Workshop on the Cognitive Scie of Natural Language Processing, Galway, 1999.* n.y.p.
36. PERRY, Elaine, Heather ASHTON and Allan YOUNG (eds.): *Neurochemistry of C sciousness. Neurotransmitters in mind.* 2002.
37. PYLKKÄNEN, Paavo and Tere VADÉN (eds.): *Dimensions of Conscious Experie* 2001.
38. SALZARULO, Piero and Gianluca FICCA (eds.): *Awakening and Sleep-Wake C Across Development.* 2002.
39. BARTSCH, Renate: *Consciousness Emerging. The dynamics of perception, imaginat action, memory, thought, and language.* 2002.
40. MANDLER, George: *Consciousness Recovered. Psychological functions and origins of c scious thought.* 2002.
41. ALBERTAZZI, Liliana (ed.): *Unfolding Perceptual Continua.* 2002.
42. STAMENOV, Maxim I. and Vittorio GALLESE (eds.): *Mirror Neurons and the Evolu of Brain and Language.* n.y.p.
43. DEPRAZ, Natalie, Francisco VARELA and Pierre VERMERSCH.: *On Becoming Aw* n.y.p.
44. MOORE, Simon and Mike OAKSFORD (eds.): *Emotional Cognition. From brai behaviour.* 2002.
45. DOKIC, Jerome and Joelle PROUST: *Simulation and Knowledge of Action.* n.y.p.
46. MATHEAS, Michael and Phoebe SENGERS (ed.): *Narrative Intelligence.* n.y.p.
47. COOK, Norman D.: *Tone of Voice and Mind. The connections between intonat emotion, cognition and consciousness.* n.y.p.

Emotional Cognition

Edited by
Simon Moore ar
Mike Oaksford

Advances in Consciousness Research

OFFPRIN

This is an offprint from:

Simon Moore and Mike Oaksford (eds.)
Emotional Cognition.
From brain to behaviour
John Benjamins Publishing Company
Amsterdam/Philadelphia
2002
(Published as Vol. 44 of the series
ADVANCES IN CONSCIOUSNESS RESEARCH, ISSN 1381-589X)

ISBN 90 272 5168 1 (Eur.) / 1 58811 244 6 (US) (Hb)
ISBN 90 272 5164 9 (Eur.) / 1 58811 224 1 (US) (Pb)
© 2002 – John Benjamins B.V.

No part of this book may be reproduced in any form,
by print, photoprint, microfilm or any other means, without
written permission from the publisher.